14000 Burn Rd
Arlington, WA 98223
USA
Ph (425)374-9060
www.midnitesolar.com

MNDC Instructions

Model: MNDC125, MNDC175, MNDC250

Shown with 250 amp sized breaker

MNDC closed

The Mini-DC was designed to take into account many different types of renewable energy installations. These installation instructions will describe and show some of the more common possibilities.

Features:

- Aluminum chassis. (no rust in the tropics or around salt water)
- Hinged door for easy access to electrical circuits
- Inverter breaker included (125, 175 or 250 amp)
- Din rail for DC circuits such as PV in, Chg Cntrl out, DC-GFP, DC loads, PV combiner
- Ground bus bar with 14 poles
- Six mounting spots for 500 amp, 50mV shunt
- Mounting spot for insulated bus bar (for PV negative connection point)
- Knock outs for inverter and battery cables, charge control mounting, DC & PV in & out
- 5/16” diameter stud for battery negative tie point

Dimensioned drawing showing conduit locations and sizes

Top view showing three 1” knockouts. The left two knockouts fit charge controllers such as the Classic, MX60, C-40 and Tristar controllers

The left side of the MNDC chassis has three 2” knockouts and two ½” knockouts. The 2” knockouts are intended for inverter DC cables. If installing to a Trace or Xantrex SW inverter, use a 2” offset nipple to attach to the SWCB conduit box.
If routing cables directly through the hole with no conduit, make sure a plastic grommet is installed to avoid chafing.

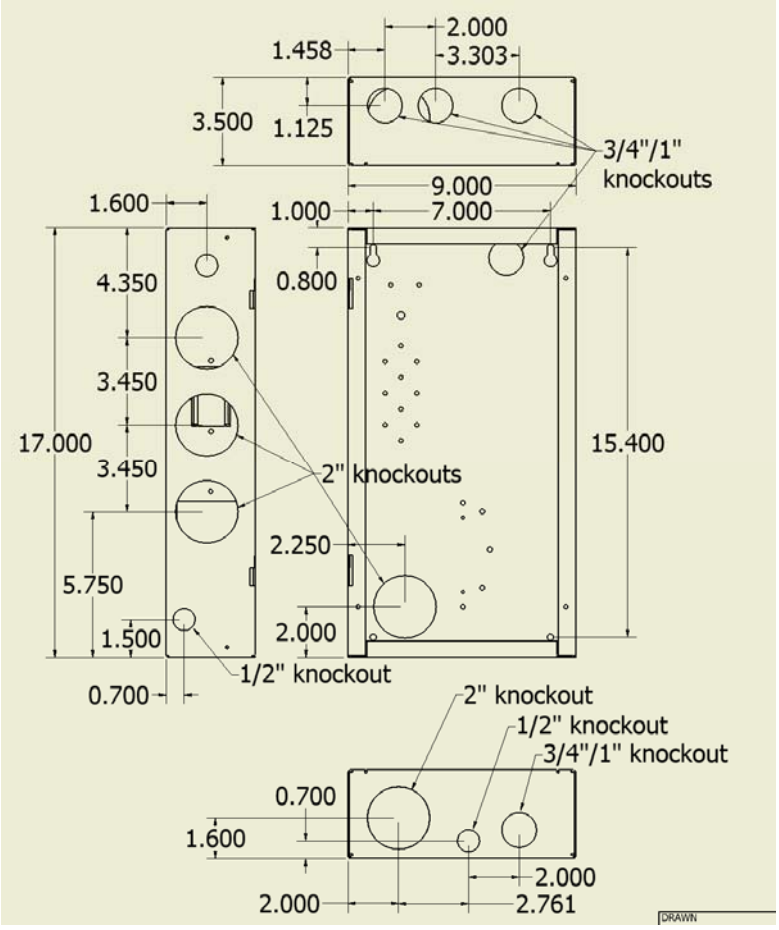

The bottom surface is normally where the battery cables will enter. The 1” knockout can be increased in size to accommodate a second 2” conduit opening if required. This is one way to hook up to a Trace or Xantrex DR Series conduit box.

Wire type

Due to the small size of this box and limited wire bending room, it is required that the super flexible type battery cable be utilized. Cobra Cable X-Flex is one approved type of cable. Welding cable although not listed for use in residential wiring will also meet the flexibility requirement. Wiring for the din rail mount breakers such as 6AWG for PV circuits may be the stiff THHN or similar type of wire.

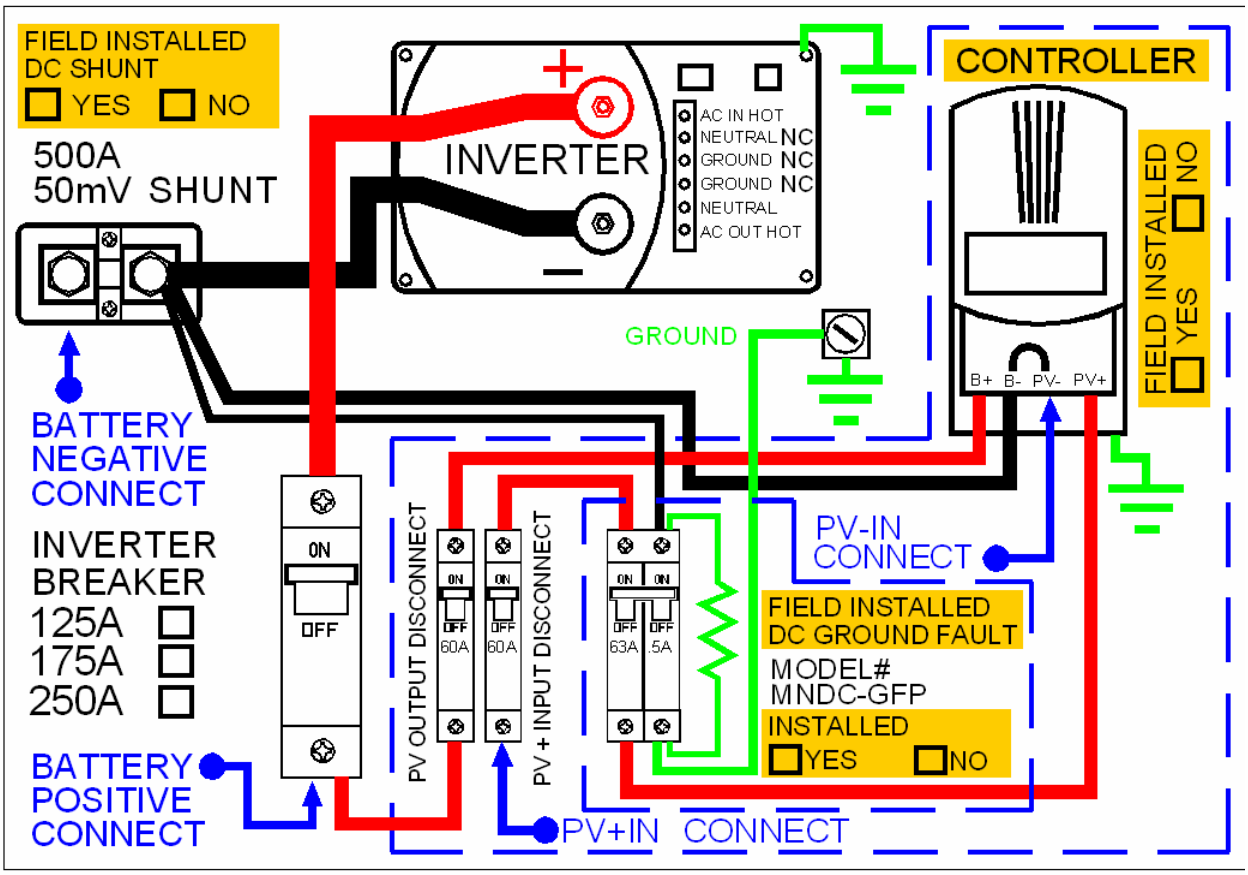

Wiring diagram supplied on the door of MNDC

Grounding

There are various ground circuits that need to be considered in the renewable energy system. The MNDC chassis should be grounded to your earth ground rod through a 6AWG wire connected to the ground bus bar located in the top left section of the MNDC chassis. The MNDC ground bus bar will then become your primary system DC ground. The ground bus bar is also where DC lightning arrestors get grounded. It is advisable to use one of the ½" conduit knockouts to mount a DC lightning arrestor to the MNDC box. It is also common to have a DC lightning arrestor out at the PV Panels that are grounded through their own ground rod. In dry climates it is advisable to also run a ground wire from the PV panels to the MNDC ground. The MNDC ground bus bar is an ideal place to ground a DC-GFP when installed as well as the inverter chassis and the charge control chassis. Do the grounds first since they normally lie in the bottom of the chassis.

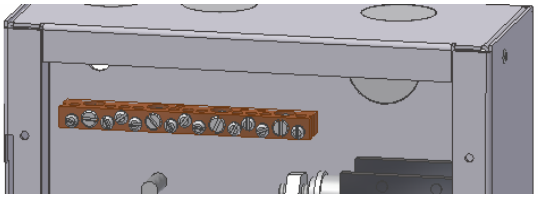

Ground Bus Bar

Battery Negative connection

The wiring diagram shows a 500 amp shunt. This is used to measure voltage drop across the shunt to aid in calculating battery state of charge. The shunt does not ground the battery negative circuit. If this shunt is not installed, then you may use the 5/16” stud directly above the shunt area as a battery negative tie point. Using this tie point will ground the battery negative to the chassis. Grounding the battery negative is not allowed when employing a DC-GFP device. The inverter side of the shunt or the 5/16” stud are also an ideal tie point for PV negative or other DC negative circuits.

Battery status monitor systems such as the Trimetric, E-Meter, Trace Meter etc are available with or without the 500 amp 50mV shunt. The MNDC does not come with this shunt, so you will need to order the shunt.

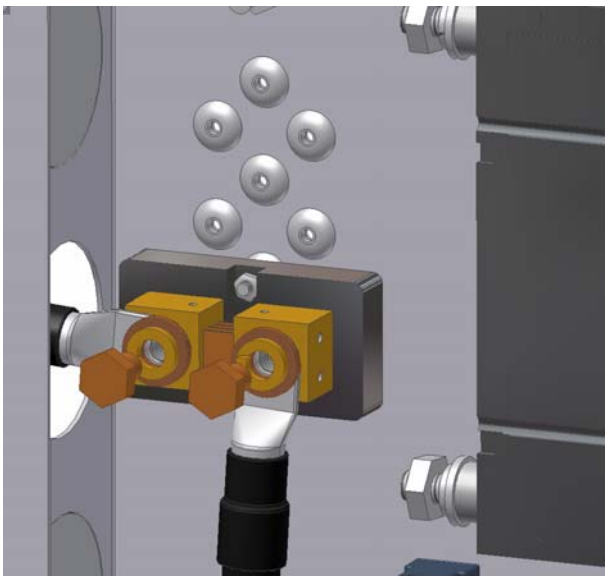

Shunt mounted horizontal on bottom dimples

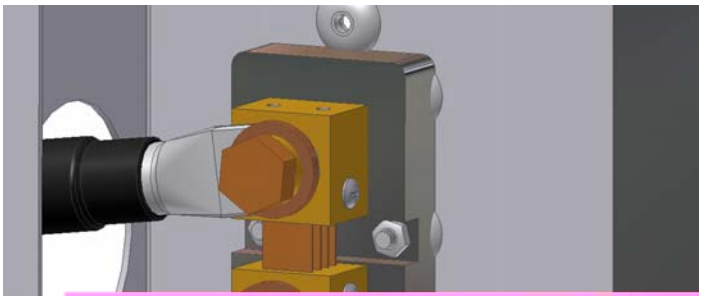

Shunt mounted vertical on bottom dimples

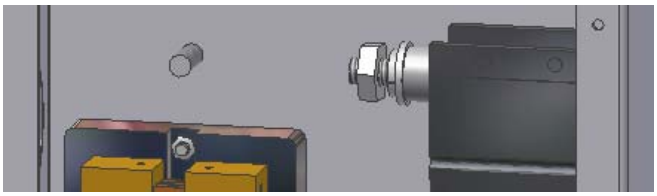

5/16” stud for battery negative tie point

The hardware kit bag contains a 5/16” kepnut for use with this grounding battery negative stud.

Battery Positive connections

DC positive from the battery bank connects to the lower section of the large DC inverter breaker. The lower inverter breaker stud is also the common point for connection of additional DC circuits such as from the output of a charge controller. Do not connect other charging sources to the top of the inverter breaker as this would apply power to the inverter even when the inverter breaker is turned off. The top section of the inverter breaker connects to the inverter positive battery terminal post. The following photo shows the inverter breaker wired with an additional charging source connected to the bottom section of the breaker.

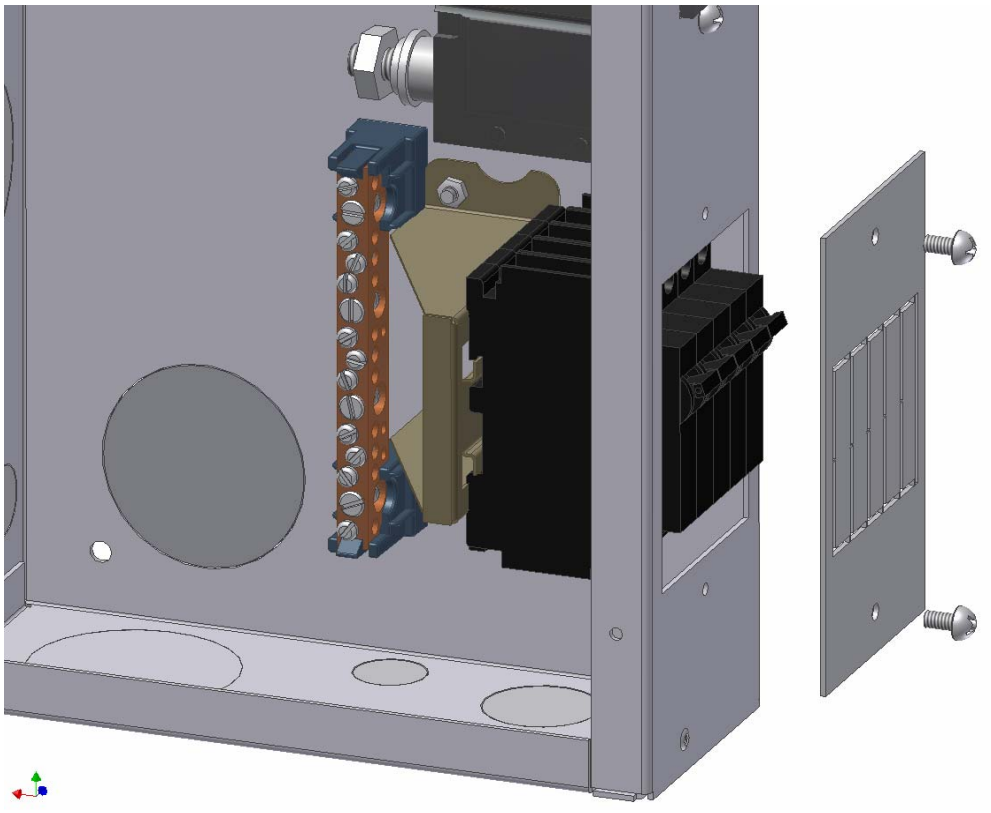

Remove the DC breaker cover to install din rail mount breakers. Insure the yellow tab snaps into place to secure the breakers. Strip wires 3/8” and bend at ¾” from end. This section is very tight so pay close attention to wire routing. Use cable ties to secure wires in a neatly routed bundle. Lat the cover plate on a flat scrap wood surface and using a flat screw driver blade and hammer, cut the tabs.

DC Breakers and Cover

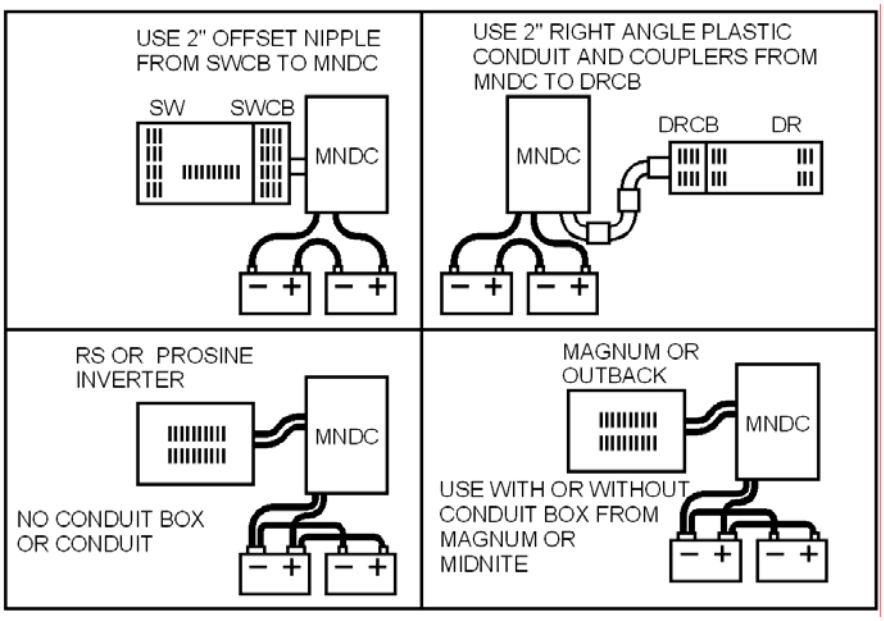

MNDC uses for various different inverter installations.

MNDC fully wired